MEACO

MeacoDry

DD8L Pro 8L

Desiccant Dehumidifier

Instruction Manual

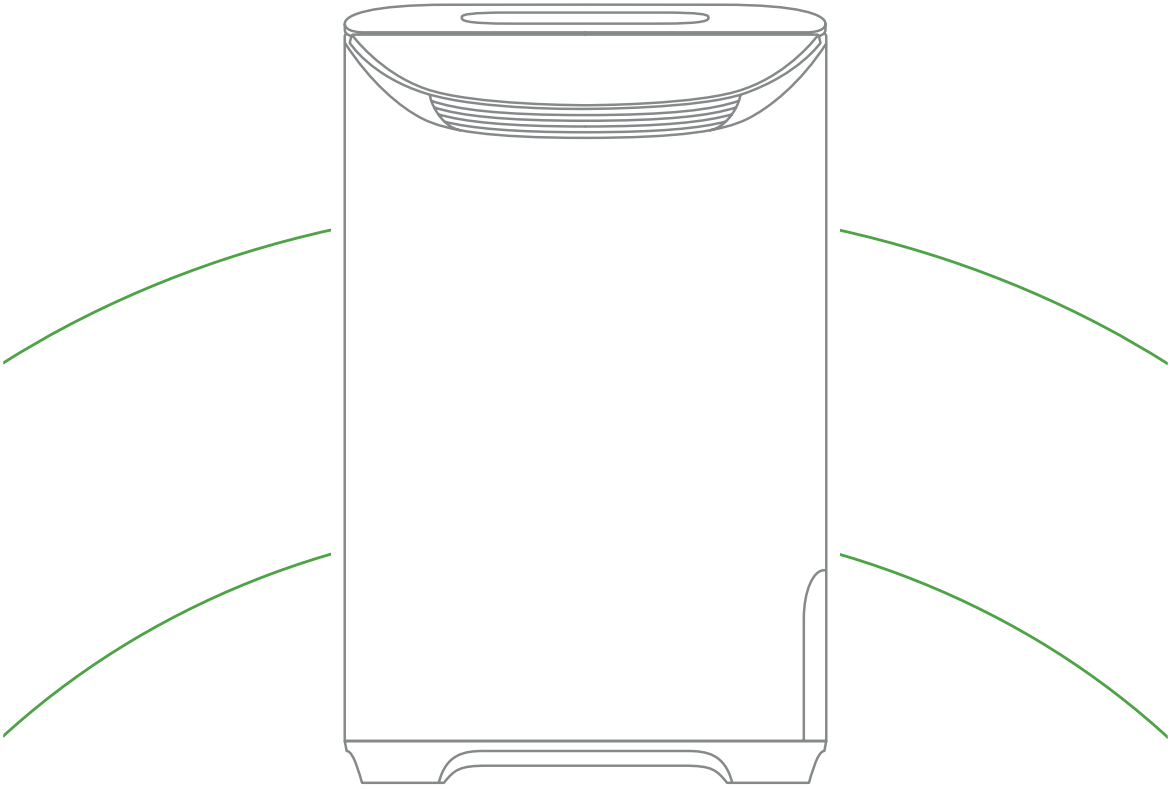

Thank you for choosing Meaco

Thank you for choosing Meaco, we really appreciate it. We built the DD8L Pro after years of research and customer feedback to deliver faster laundry drying. A large step forward in desiccant technology, the DD8L Pro gives you real control over energy consumption - combining efficiency with powerful performance. We took the time to design a dehumidifier that blends into your home without compromising on its performance. You'll soon wonder how you managed without it.

This manual contains important information on the use and care of your dehumidifier. Please take some time to read this manual to take full advantage of your dehumidifiers' many benefits and features.

Contents

Safety information 1

Register your Meaco warranty 4

Meaco app 5

What's included 6

Product identification 7

First steps 9

Operation 11

Water tank 15

Continuous drainage 16

Maintenance 17

Storing 18

Troubleshooting 18

Meaco customer care 20

Specifications 20

Warranty terms & conditions 21

Safety information

⚠ Important safety information

Keep children away: Do not allow children to play with or around this dehumidifier, as it could result in injury. Be sure the dehumidifier is inaccessible to children when not attended. This dehumidifier is not intended for use by persons (including children) with reduced physical, sensory or mental capabilities, or lack of experience and knowledge, unless they have been given supervision or instruction concerning use of the dehumidifier by a person responsible for their safety.

Keep unit grounded: Always operate the dehumidifier with a grounding plug and a grounded electrical outlet. A grounding plug is an essential safety feature that helps reduce the risk of shock or fire.

Protect power cord from damage: Never operate a dehumidifier with a damaged power cord, as this may lead to electrical or fire hazards. If the power supply cord is damaged, it must be replaced by a qualified engineer with a cord of the same type and amperage rating.

Extension cords: Extension cords must be grounded, in good working order and able to deliver the appropriate voltages to the dehumidifier.

Handle with care: Do not drop, throw or crash the dehumidifier. Rough treatment can damage the components or wiring and create a hazardous condition.

Run on a stable surface: Always operate the dehumidifier on a stable, level surface, for example the floor or a strong counter, so that the dehumidifier cannot fall and cause injury.

Keep air intakes clear: Do not clog or block the air intakes by placing the dehumidifier too close to curtains, walls or anything that will restrict the air inlet. Filters must also be kept clean. Failure to do so might cause the unit to overheat and result in a fire or electrical hazard.

Keep electrical components dry: Never allow water inside the dehumidifier's electrical components. If these areas become wet for any reason, thoroughly dry them before using the dehumidifier. If in doubt, do not use the dehumidifier and consult a qualified electrician or a Meaco approved engineer.

Domestic use only: This dehumidifier is designed for domestic use only and should not be used in commercial environments.

The operator must make the operating instruction available for the user and make sure that the user understands the manual.

Instructions about the WEEE

Correct disposal of this product
(Waste Electrical & Electronic Equipment)

This marking indicates that this product or accessories should not be disposed of with other household waste at the end of their working life. To prevent possible harm to the environment or human health from uncontrolled waste disposal, please separate these items from other types of waste and recycle them responsibly to promote the sustainable reuse of material resources. Users should contact either the retailer where they purchased this product, or their local government, for details of where and how they can take these items for environmentally safe recycling.

Declaration of conformity

Hereby, Meaco declares that this radio equipment is in compliance with Directive 2014/53/EU and with the relevant statutory requirements. The full text of the EU declaration of conformity and the UK declaration of conformity is available at the following internet address: https://www.meaco.com/pages/compliance-data.

Wiring instructions

Should it be necessary to change the plug, please note the wires in the mains lead are coloured in accordance with the following code:

Blue: Neutral
Brown: Live
Green and yellow: Earth

As the colours of the wires in the mains lead of this appliance may not correspond with the coloured markings identifying the terminals in your plug, proceed as follows:

1. The **BLUE** wire is the NEUTRAL and must be connected to the terminal which is marked with the letter N or coloured **BLACK**.
2. The **BROWN** wire is the LIVE and must be connected to the terminal which is marked with the letter L or coloured **RED**.
3. The **GREEN/YELLOW** is the EARTH and must be connected to the terminal which is marked with the letter E or coloured **GREEN** or **GREEN/YELLOW**.
4. Always ensure that the cord grip is positioned and fastened correctly.
5. Only ever use the same fuse as fitted in the original product, if in doubt please contact Meaco first, or a qualified electrician.

Example wiring for a Standard British Plug:

Note – The Earth Terminal is marked with the letter E or Earth Symbol ⏚.

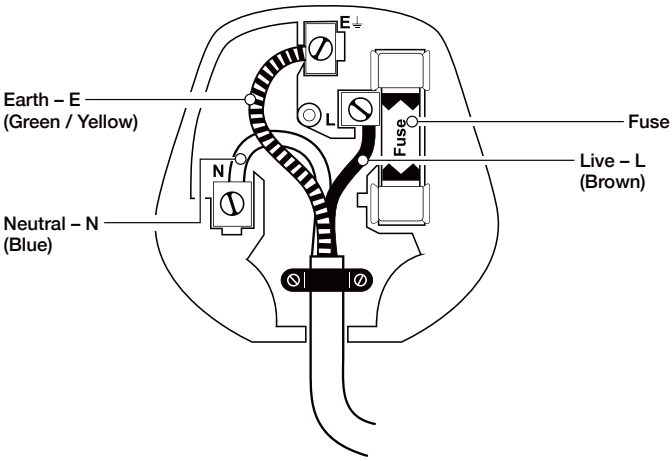

Register your Meaco warranty

Our Meaco dehumidifier comes with a free three-year warranty. Simply register your details online and you'll be covered for parts and labour for three-years from the date of purchase, subject to the terms and condition of the warranty.

Where to find your dehumidifiers serial number

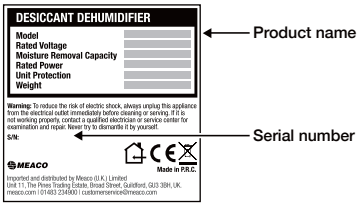

The serial number can be found on the rating label on the back of your dehumidifier.

Remember to keep a copy of your purchase receipt safe, you will need to show this to our Customer Service team should you need to make a warranty claim.

Ways to register your Meaco warranty

Register online

Visit our website to register your free 5 year warranty online:
https://www.meaco.com/pages/register-your-warranty

Register by phone

Call our Customer Service team to register your free three year warranty over the phone:
01483 234900 Opening times: Monday - Friday 9am - 5:30pm

Meaco App

Control your new dehumidifier with the Meaco app.

Scan the QR code to install the Meaco app or download the Meaco app from the App store or Google Play.

Open the app and follow the instructions to create a new account and pair your dehumidifier.

Connecting your dehumidifier to your Meaco app

1. Plug the dehumidifier into the mains and press the power button.
2. Hold the Smart Laundry button down for 2 seconds.
3. The WiFi indicator (under the Smart Laundry button) will flash.
4. In the Meaco app, press the + button in the top right hand corner and then ‘Add device’.
5. The app will search for nearby devices and your dehumidifier will appear, click ‘Add’.

What’s included

Carefully unpack the dehumidifier. Keep all packaging materials away from children.
We recommend flat packing and keeping hold of the box should you need it in the future.

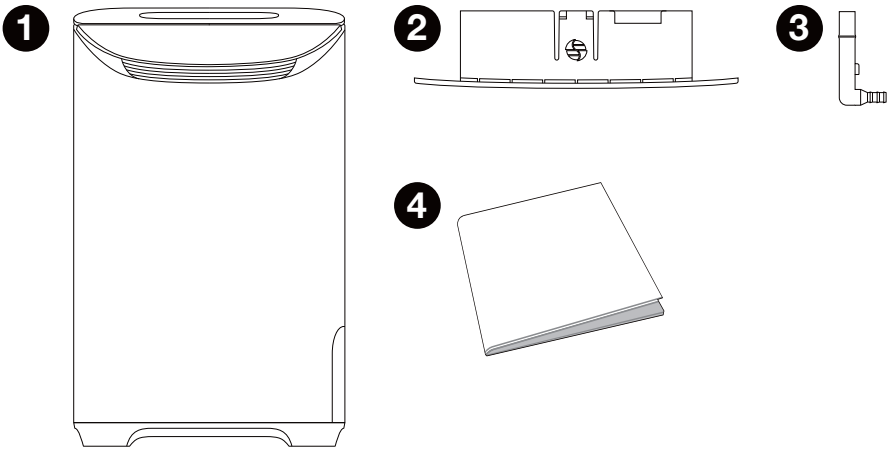

1. Meaco DD8L Pro
2. Cable tidy
3. Hose adaptor
4. Instruction manual

Product identification

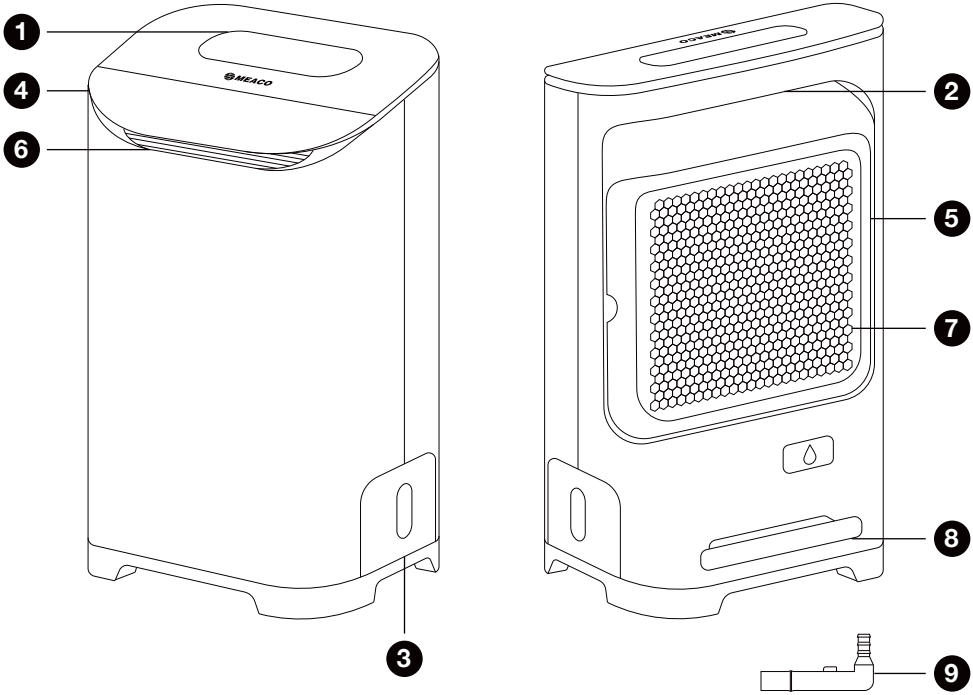

1. Display
2. Handle
3. Water tank
4. Louvre
5. Combined dust filter and case
6. Air outlet
7. Air inlet
8. Cable tidy
9. Hose adaptor

The hose adaptor (found inside the lid of the water tank) can be connected to a standard garden hose for continuous drainage.

Cable tidy assembly

The cable tidy must be connected for the dehumidifier to turn on. The cable tidy has been designed to prevent users from putting the dehumidifier too close to a wall or piece of furniture, preventing overheating.

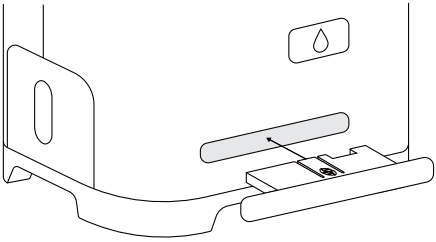

Insert the cable tidy into the bottom back of the dehumidifier. Make sure it is inserted the correct way up by keeping the cut out at the top.

Castor assembly

To fit the castors lay the dehumidifier on its back and push the castors into the four holes underneath the dehumidifier.

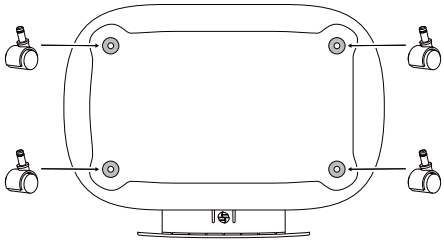

Castors are not included but can be purchased separately from meaco.com.

First steps

When you first receive your dehumidifier, it is important you follow the steps below carefully:

1. Check your dehumidifier and its box and packaging for any transport damage.
   In case of damage, inform the sender immediately.
2. Choose where you would like to locate your dehumidifier. This dehumidifier has been carefully designed allowing you to place the dehumidifier as close to a wall as you wish.
3. Plug the dehumidifier into the mains and turn it on using the Power Button. When the dehumidifier is first switched on a number will appear on the display. Allow the dehumidifier to gauge an accurate reading of the humidity level in the environment it is situated in for the first 10 minutes.
4. Press the Louvre button to open the louvre. See page 13 for louvre settings.
5. Use page 11 to determine the correct setting for your dehumidifier usage.

Dehumidifying your house

Your dehumidifier can be used to maintain an optimum humidity level throughout your house or flat. Moisture in the air from the entire house/flat will migrate towards the dehumidifier, reducing the humidity level. When doing so, we would recommend the following:

- Situate your dehumidifier in a central area (e.g. a landing or hallway).
- Keep your dehumidifier running 24/7.
- Keep all internal doors open.
- Keep external doors and windows closed.
- Use Smart Humidity Mode to set your dehumidifier to reach a target of 55%RH.
- Press the Louvre button to open the louvre. See page 13 for louvre settings.

If you want to use your dehumidifier to reduce the humidity level in a single room or area of the house, use the same settings as above, however situate the dehumidifier inside the ‘problem’ room or area and keep the internal door closed.

Dehumidifying other applications

Your dehumidifier can be used in many applications including garages, boats, caravans and conservatories. In colder applications, the dehumidifier will run as normal down to 3°C. In temperatures below 0°C, the dehumidifier will default to low fan speed, the control panel will be locked and only the power button can be used. Once the temperature increases to 3°C, the dehumidifier will revert back to its previous settings.

Using your dehumidifier to dry your laundry

Dehumidifiers are very efficient at drying your laundry quickly and cheaply. When doing so, we would recommend the following:

- Situate your dehumidifier in a room with your laundry.
- Place the dehumidifier close to your laundry but not too close that water could drip onto the dehumidifier.
- Keep all doors and windows closed.
- Use Smart Laundry Mode to set your dehumidifier to run continuously for a chosen number of hours.
- Open the louvre and direct the airflow towards your laundry.
- Use a Meaco air circulator to circulate the dry air and reduce drying time.

Display readings

When the dehumidifier is turned on the Chase display will show the current humidity level and the target humidity level. The current humidity level is shown by the bars below the line. The target humidity level is the figure circled above the line.

Cooling down

As the DD8L Pro is a desiccant dehumidifier, it needs a cooling down period. When the dehumidifier has been in use and is turned off, ‘Cooling down, please do not unplug’ will appear on the display and the fan will run on low fan speed with the louver completely open. Do not unplug the dehumidifier until the ‘Cooling down’ message has disappeared.

Operation

When the dehumidifier is first plugged into the mains the whole display will light up for one second. The louvre will open and then close. The power and timer button will remain lit.

- All buttons on the control panel only require a short press: press the buttons firmly and quickly.
- When in use the louvre must be open - press the louvre button to open.

Control panel

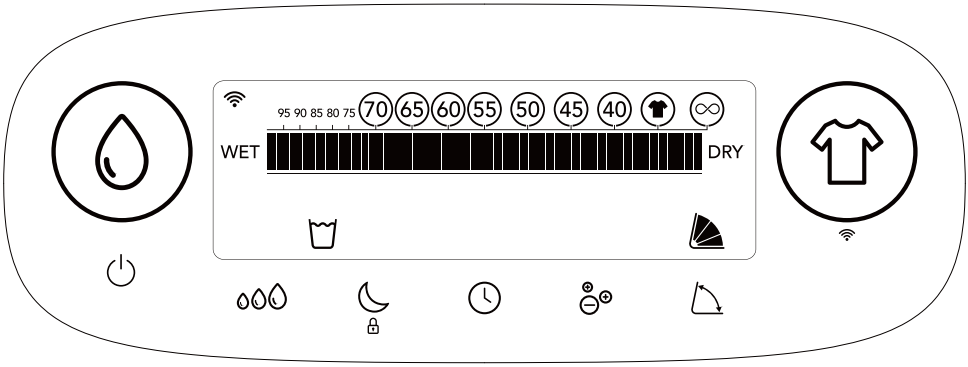

ON/OFF: Press the power button once to turn the dehumidifier on. The display will turn on and the dehumidifier will start to run. The dehumidifier will default to Smart Humidity Mode and 55%RH. To turn the dehumidifier off press the power button again.

Important: When you press the ON/OFF button to turn the dehumidifier off, the louvre will open completely and the dehumidifier will continue to run on low fan speed for 15 minutes to cool down. Do not unplug the dehumidifier from the mains until this has finished.

Smart Humidity Mode: Press the Smart Humidity Mode button once to enter Smart Humidity Mode. In this mode the dehumidifier will default to a target humidity of 55%RH.

Variable Humidistat: To set your dehumidifier to reach a target humidity other than 55% continue to press the Smart Humidity Mode button and scroll through the options in the following order: 40, 45, 50, 55, 60, 65, 70, CO. Once you have reached your desired target, it will stay displayed with a circle around it. CO stands for Continuous - with this target the dehumidifier will continue to run and only turn off when the water tank is full, regardless of the humidity level.

Once the target humidity level has been reached (-2%) the dehumidifier will stop. Every 30 minutes the fan will run and check the humidity level, the dehumidifying indicator will turn off. If the humidity level has increased more than 2% above the target, the heater will turn on and the dehumidifier will start to run again – the dehumidifying indicator will be solid. If the humidity level is within 2% of the target, the dehumidifier will go back to sleep and check the humidity level in another 30 minutes.

Important: In any mode the heater will run for 4 hours, rest for 30 minutes and then restart. The fan will run continuously.

Smart Energy Mode: Use Smart Energy Mode to select either Auto or Manual to control the dehumidifiers power consumption. In AUTO mode, the dehumidifier will automatically vary between low, medium and high power consumption and fan speed depending on the relationship between the target and relative humidity. See table below. In Manual mode choose your own power consumption and fan speed. See table below.

Icon	Humidity level	Power	Fan speed
	If the relative humidity level is within 5% of the target humidity level.	200 watts	Low
	If the relative humidity level is between 6-20% of the target humidity level.	400 watts	Medium
	If the relative humidity level is 20% over the target humidity level.	600 watts	High

In Continuous Mode the dehumidifier will default to 400 watts and medium fan speed however manual mode can be used to change these settings. When dehumidifying the droplets will show solid. When not dehumidifying the droplets will show hollow.

Smart Laundry Mode: Press the Smart Laundry Mode button once to enter Smart Laundry Mode. In this mode the dehumidifier will default to a target humidity of 35%RH, high fan speed and a wide louvre. The laundry indicator will show on the display. The dehumidifier will run in Smart Laundry Mode for 6 hours, after 6 hours the dehumidifier will turn off. Within this time the heater will run for 4 hours, rest for 30 minutes and repeat. To adjust the amount of time left in Smart Laundry Mode, press the timer button. To stop Smart Laundry Mode press the smart humidity button or turn the dehumidifier off and on again.

If the dehumidifier reaches a humidity level of 32%RH before the 6 hours is up, the heater will turn off to stop the air from becoming too dry, but the fan will continue to run on high fan speed. The dehumidifying indicator will turn off. If the relative humidity increases to 38%RH the heater will turn back on. It will do this until the 6-hour timer is up.

Hold the smart laundry button for 2 seconds to enter . For further instructions see page 5.

Night Mode: Press the Night Mode / child lock button once to enter Night Mode. The fan speed will be reduced to low (only if it is currently in high); the buttons will not beep when pressed and all lights on the display will turn off (the Night Mode indicator will turn off 3 seconds later than the rest of the display). The louvre will completely open (for minimal airflow noise). Press any button to wake up the dehumidifier and view the display. Press the Night Mode / child lock button twice to exit Night Mode.

Use the timer button to set an ON or OFF timer. To remove either the ON or OFF timer, press the timer button until you reach ‘00 hrs’.

Timer On: When the dehumidifier is in standby mode, use the timer button to move between 1 and 24 hours in which the dehumidifier will turn on. The interface will display the number of hours in which the dehumidifier will turn on e.g. ‘03 hr’ and ‘ON’.

Timer Off: When the dehumidifier is on, use the timer button to move between 1 and 24 hours in which the dehumidifier will turn off. The interface will display the number of hours in which the dehumidifier will turn off e.g. ‘03 hr’ and ‘OFF’. If in Night Mode, the interface will turn off.

Ioniser: Press the Ioniser button to turn the ioniser on and off. The ioniser is a sterilising ioniser that is clinically proven to remove germs, bacteria, mould spores, odours and ticks from the air.

Louvre: Press the Louvre button to move between the following 4 options:

- **Narrow:** Automatically move between 0° and 15°.
- **Medium:** Automatically move between 0° and 40°.
- **Wide:** Automatically move between 0° and 85°.
- **Open:** Fixed open at 85°.

Child Lock: Hold the Night Mode / child lock button down for 2 seconds to lock the dehumidifiers control panel – once locked you will not be able to change any settings or turn the dehumidifier off. The dehumidifier will beep once, and the child lock indicator will light up. To remove child lock, hold the Night Mode / child lock button down for another 2 seconds.

Control panel display indicators

Water Tank Full Indicator: Once the water tank is full the water tank full indicator will then light up and beep twice (except in Night Mode). The dehumidifier will stop running until the water tank has been emptied and inserted back in place. Once the water tank has been emptied and inserted back in place, the dehumidifier will continue to run in the previous mode.

Ioniser Indicator: The ioniser indicator will light up when the ioniser has been turned on.

Child Lock Indicator: The child lock indicator will light up solid when child lock has been enabled.

Heart Indicator: The heart indicator recommends the suitable target humidity level - 55%RH.

Water tank

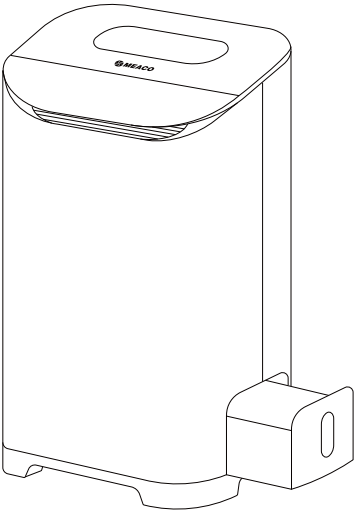

The dehumidifier can be used to collect water in one of two ways: via the water tank or via continuous drainage. For more information on how to use continuous drainage, see page 16.

When the water tank is full and requires emptying, the dehumidifier will turn off, beep twice (except in Night Mode) and the water tank full indicator will light up. To empty the water tank, simply pull the water tank out from the dehumidifier and empty the water. Use the pouring holes on the left or right corner of the water tank to empty the water (the water tank lid does not need to be removed).

The water collected can be used to water non-edible plants only – do not consume.

Water tank float

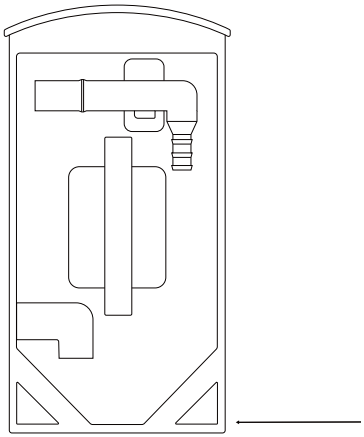

Located inside the water tank is a float. It is essential that the float is NOT removed from the water tank. The float measures the level of water in the water tank and triggers the sensor to turn the dehumidifier off when the water tank is full. If the float is removed from the water tank, the dehumidifier will not run.

Continuous drainage

Continuous drainage can be used to drain water from the dehumidifier without having to empty the water tank. This is ideal for customers who wish to leave their dehumidifier unattended in garages or second homes.

The right-angle adaptor required can be found in the lid of the water tank. This adaptor has been designed to fit a standard garden hose (ID: 12.5mm). Hose not included. Make sure the hose runs downwards with no kinks, bends or blockages to allow the water to drain out via gravity.

1

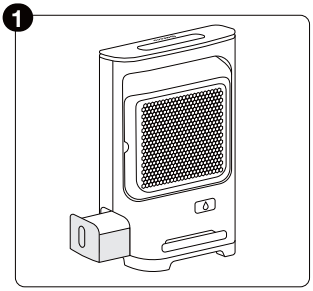

Remove the water tank.

2

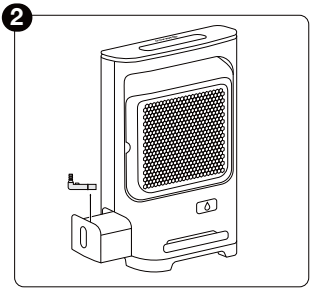

Remove the hose adaptor from the water tank lid.

3

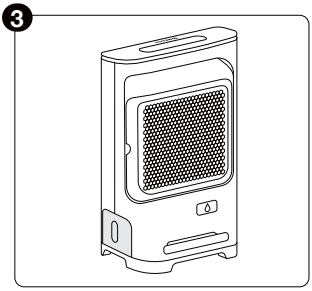

Put the water tank back into the dehumidifier.

4

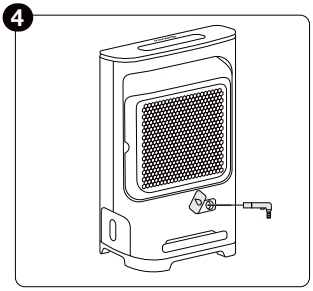

Open the black seal at the back of the dehumidifier and insert the hose adaptor.

5

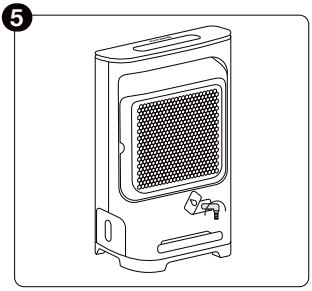

Push the hose adaptor in fully and then twist to secure (you can twist to either the left or right).

6

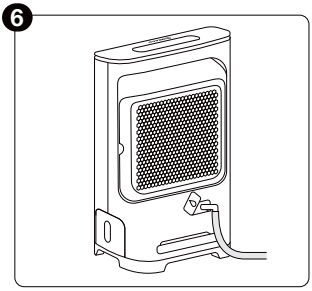

Attach the hose to the spout.

Maintenance

To ensure your dehumidifier is always performing at its best, it's important to regularly clean it.

- Always unplug your dehumidifier from the mains before cleaning.
- Do not allow the dehumidifier to get wet.

Cleaning the exterior

Clean the exterior with a soft, dry cloth. If the dehumidifier is extremely dirty, use a slightly damp cloth. Never spray the device with water.

Cleaning the dust filter

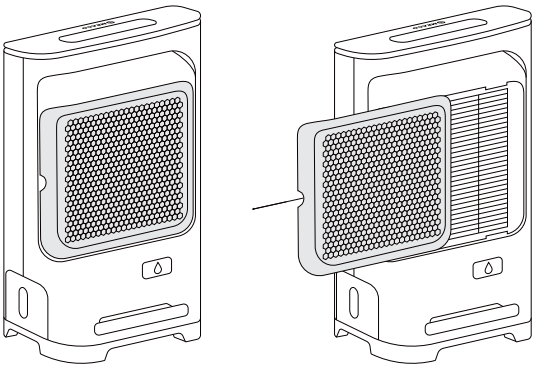

The dust filter is a life-long filter and therefore should not need to be replaced (other than for wear and tear reasons). When used regularly, the filter may become clogged with dust and dirt particles. The filter must be cleaned a minimum of every two weeks (not doing so could invalidate the units' warranty). Please follow the steps below.

1. Remove the dust filter from the dehumidifier by sliding the filter case to the left, away from the dehumidifier. The dust filter is built into the filter case and cannot be removed.
2. Clean the dust filter with the end of a hoover or soapy water no hotter than 40°C. Rinse and dry completely before inserting back into the dehumidifier.

Cleaning the water tank

To clean inside the water tank, simply remove the water tank lid.

Storing

If the dehumidifier will not be used for a long period of time, take the following steps:

1. Remove the plug from the socket and empty the water tank. Allow the water tank and the dehumidifier to dry completely, this can take a couple of days.
2. Use the cable tidy on the back of the dehumidifier to wrap the cable away.
3. Clean the filter and store the device in a dust-free location away from direct sunlight, preferably covered with a sheet of plastic.

Troubleshooting

If you come across a problem with your dehumidifier, check the table below and try the suggestions. If the problem persists, contact Meaco.

Error	Action
The display shows 'CONNECT CABLE TIDY'	Ensure the cable tidy is connected.
The display shows 'CLEAN FILTER'	Clean the dust filter.
The display shows 'ROOM TOO HOT OR TOO COLD'	The environment the dehumidifier is being used in is too warm or too cold. Make sure the dehumidifier is being used in an environment between 1°C and 35°C.
Dehumidifier indicator is not displayed	The dehumidifier is checking the humidity level to see if it has risen above the set target.
Buttons do not beep when pressed	The dehumidifier is in Night Mode. To remove Night Mode press the Night Mode button twice.
There are no lights on the display	The dehumidifier is in Night Mode. To remove Night Mode press the Night Mode button twice.
The dehumidifier does not dehumidify / collects little water	• The temperature is either too cold or too warm, make sure the dehumidifier is being used in an environment between 1°C and 35°C. • The humidity level is already very low – below 45%RH the dehumidifier will not collect much water as there isn't enough moisture in the environment. • The target humidity level is higher than the actual humidity level. Use the Smart Humidity Mode button to reduce the target humidity level. • Clean the dust filter. If dirty it will block the airflow and prevent the dehumidifier from dehumidifying.

The dehumidifier works but reduces the humidity level insufficiently/there is little water in the water tank	• Be patient, it takes a few weeks to initially dry a space when a dehumidifier is introduced for the first time. • The application or space it is being used in is too large. • Make sure all windows and external doors are shut to reduce the ventilation. • Clean the dust filter. If dirty it will block the airflow and prevent the dehumidifier from dehumidifying.
The windows were clear and now the condensation has returned	This is because the outside temperature has dropped, and the windows are now colder. Use the dehumidifier on a lower target setting and run it 24 hours a day.
The condensation on my windows will not go, even when the dehumidifier is in CO mode	The surface temperature of the windows is too low for a dehumidifier to prevent condensation. This is common with single glazed windows and when the air temperature outside drops below freezing. When the temperature outside increases, running the dehumidifier in CO mode 24 hours a day should clear your windows of condensation.
The dehumidifier is blowing out warm air	The dried air is passed over heating coils before it is blown into the room as part of the dehumidification process. This is normal.
The dehumidifier is blowing out cool air	Once every 4 hours the heater is rested for 30 minutes, during this period the air will feel cooler. This is normal.
The dehumidifier is noisy	Clean the dust filter. Make sure the dehumidifier is placed on a flat surface. A dehumidifier will be nosier on wooden floors than carpet.
Night Mode is on but the fan speed hasn't changed	The change in fan speed is subtle. To hear the change: • Set the dehumidifier to Smart Laundry Mode. • Wait a couple of minutes, you will hear the dehumidifier on high fan speed. • Change the dehumidifier to Night Mode, you will hear the change to low fan speed.
C1	Clean the filter.
C2	Clean the filter.
C3	Please contact Meaco.

Meaco customer care

If you have a question about your Meaco dehumidifier, contact our Customer Service team who will be happy to help. Make sure you have your serial number and details of where and when you purchased your dehumidifier.

Contact details

Website: www.meaco.com/pages/contact-us
Email: customerservice@meaco.com
Phone: 01483 234900

Address: Unit 11, The Pines Trading Estate, Broad Street, Guildford, GU3 3BH, United Kingdom

Specifications

Dimensions (HWD)	577 x 356 x 230 mm
Nett Weight	8.7 kg
Extraction rate at 20°C and 60%RH	
Fan speed 1	2.12 L / day
Fan speed 2	5.4 L /day
Fan speed 3	7.97 L / day
Noise level	
Low fan speed	40 dB
Medium fan speed	47 dB
High fan speed	50 dB
Power consumption	
Fan speed 1	231 watts
Fan speed 2	437 watts
Fan speed 3	623 watts
Air flow	
Low fan speed	110 m^3 / hour
Medium fan speed	150 m^3 / hour
High fan speed	175 m^3 / hour
Auto-restart	Yes
Power supply	220 - 240 V, 50 Hz
Operating temperatures	+1°C to +35°C
Water tank size	2 L

Warranty terms and conditions

There is a three-year manufacturer's warranty on your dehumidifier from the date of delivery.

Within the three-year warranty all manufacturing defects will be repaired free of charge (excluding damage to the dehumidifiers filter and water tank which can be subject to wear and tear).

The following applies:

1. Any repair or replacement of your dehumidifier or its components during the warranty period will not result in an extension of the warranty period.
2. Any repair or replacement of your dehumidifier or its components during the warranty period will not result in the warranty period starting again.
3. If your dehumidifier has been opened or tampered with or not genuine components have been fitted by yourself or anyone other than a Meaco engineer, your warranty is invalid.
4. Components subject to normal wear and tear, the combined dust filter and case and hose adaptor are not covered by the warranty.
5. The warranty is only valid on presentation of the original, unaltered and date-stamped purchase receipt. If you are unable to produce proof of purchase, the warranty on your dehumidifier is invalid.
6. The warranty does not cover damage caused by actions that deviate from those as described in the instruction manual or by neglect.
7. The warranty does not cover faults caused by dirt or by third-party products.
8. Using a third-party switching device that turns the dehumidifier on or off via the mains will invalidate the warranty.
9. The warranty does not cover accidental damage.
10. All claims for compensation, including consequential damage, will not be entertained.

For the full list of the warranty terms and conditions please visit:
www.meaco.com/warranty-terms.

Version: EN301

MEACO

Unit 11, The Pines Trading Estate, Broad Street,
Guildford, GU3 3BH, United Kingdom

meaco.com

FSC
www.fsc.org
FSC® C194292
The mark of responsible forestry